Pneumatic ATC Wiring and Settings

G-Penny 2.2 kW ISO20 water-cooled ATC spindle, 220 V, 24,000 rpm: **Option A** 2-pole / 400 Hz or **Option B** 4-pole / 800 Hz · H100 VFD · 4V210-08 solenoid valve · Sienci SLB-EXT · ncSender with ncWirelessIO

1. How to set up the ATC spindle

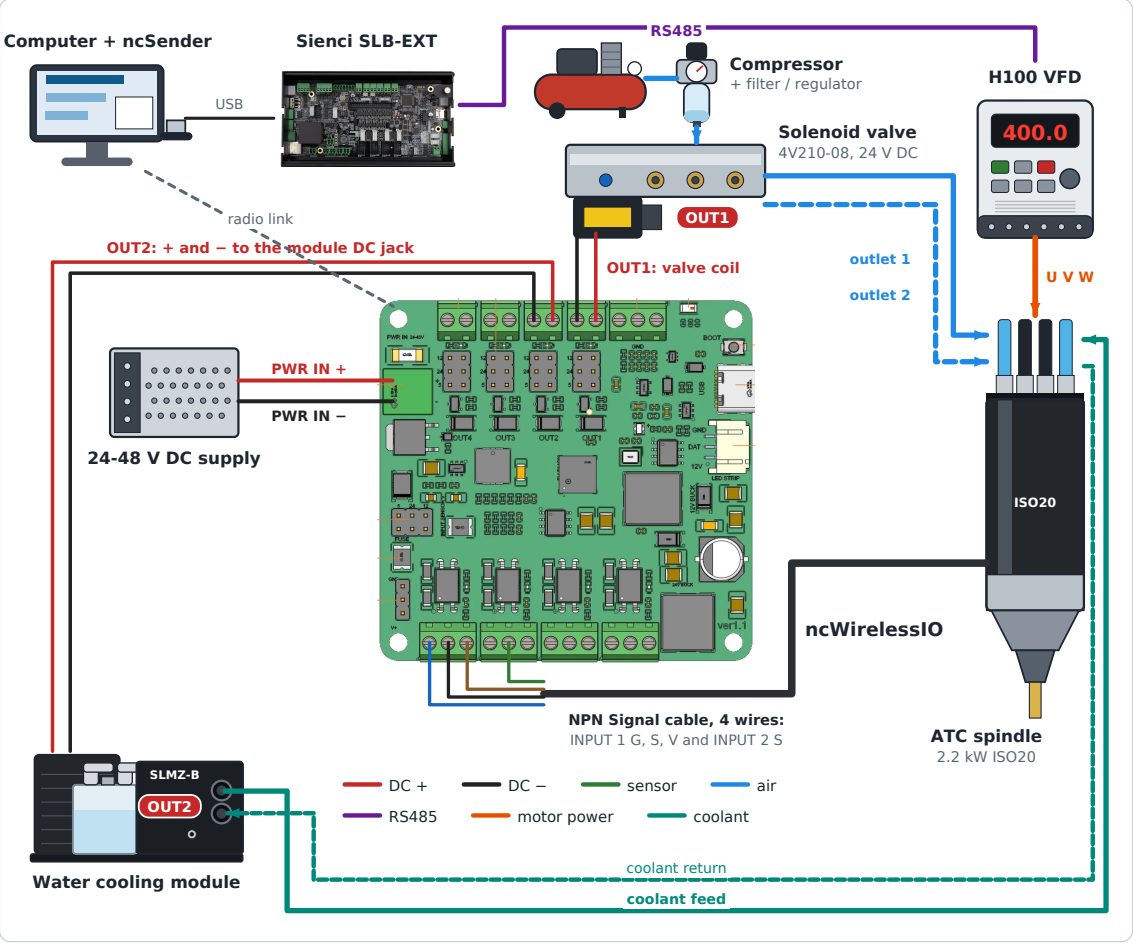

Parts list

1. ncWirelessIO franciscreation.com/p/ncwirelessio	**7. G-Penny 2.2 kW ISO20 ATC spindle**
2. ncSender Wireless USB franciscreation.com/p/ncsender-wireless-usb **or ncSender Wireless Receiver** franciscreation.com/p/ncsender-wireless-receiver	**8. H100 VFD**
3. ISO20 tool holder rack (ATC Cup Type Tool Holder 4x) franciscreation.com/p/atc-rack-cup-4x	**9. Sienci SLB-EXT controller**
4. 24-48 V DC power supply	**10. Solenoid valve 4V210-08**
5. Air compressor with filter + regulator	**11. Water cooling module SLMZ-B**
6. Air fittings	**12. Kool Connectors (water hose quick-disconnects)** pwncnc.com/products/kool-connectors

Safety: never release the drawbar while the spindle turns. Switch mains off before touching VFD or motor terminals. The solenoid coil must be DC 24 V; the ncWirelessIO cannot drive an AC coil.

2. Cooling loop

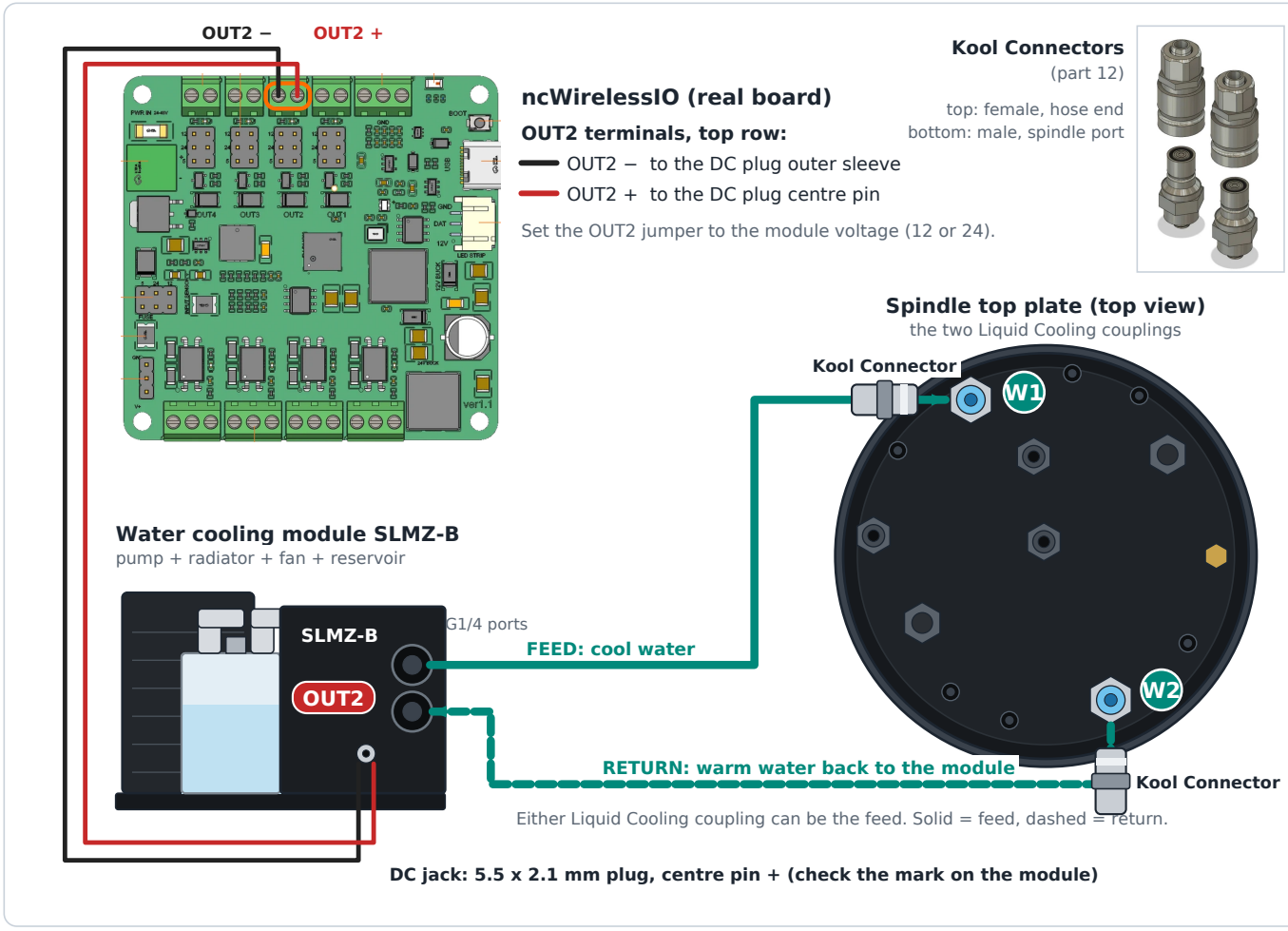

Figure 2. Closed coolant loop with a Kool Connector on each hose at the spindle, and the module powered from OUT2 of the real ncWirelessIO board.

1. **Feed:** hose from one G1/4 port on the module's front panel to one Liquid Cooling coupling on the spindle top plate (W1).
2. **Return:** hose from the other Liquid Cooling coupling (W2) back to the module's second G1/4 port. The loop is closed: the reservoir, pump, radiator and fan are all inside the module.
3. **Kool Connectors (part 12):** one on each hose at the spindle. Screw a male fitting into each Liquid Cooling port on the top plate, hand-tight only. Push a female connector onto each hose end (10 mm OD / 6 mm ID tube). The hoses then snap on and off the spindle without spilling. They are for the spindle side only, not for the cooling module ports.
4. Fill the reservoir through the cap on top with distilled water or coolant. Run the module on its own, top up as the hoses fill, and check for flow and leaks before the first spindle run.
5. **Power:** a 5.5 x 2.1 mm DC plug from ncWirelessIO OUT2 to the module's DC jack. No relay. Centre pin is normally +: check the polarity mark on the module or its adapter. Set the OUT2 jumper to the module's voltage.
6. In ncSender the plugin runs the module with the spindle and keeps it on for the idle delay (section 9).

3. Air lines

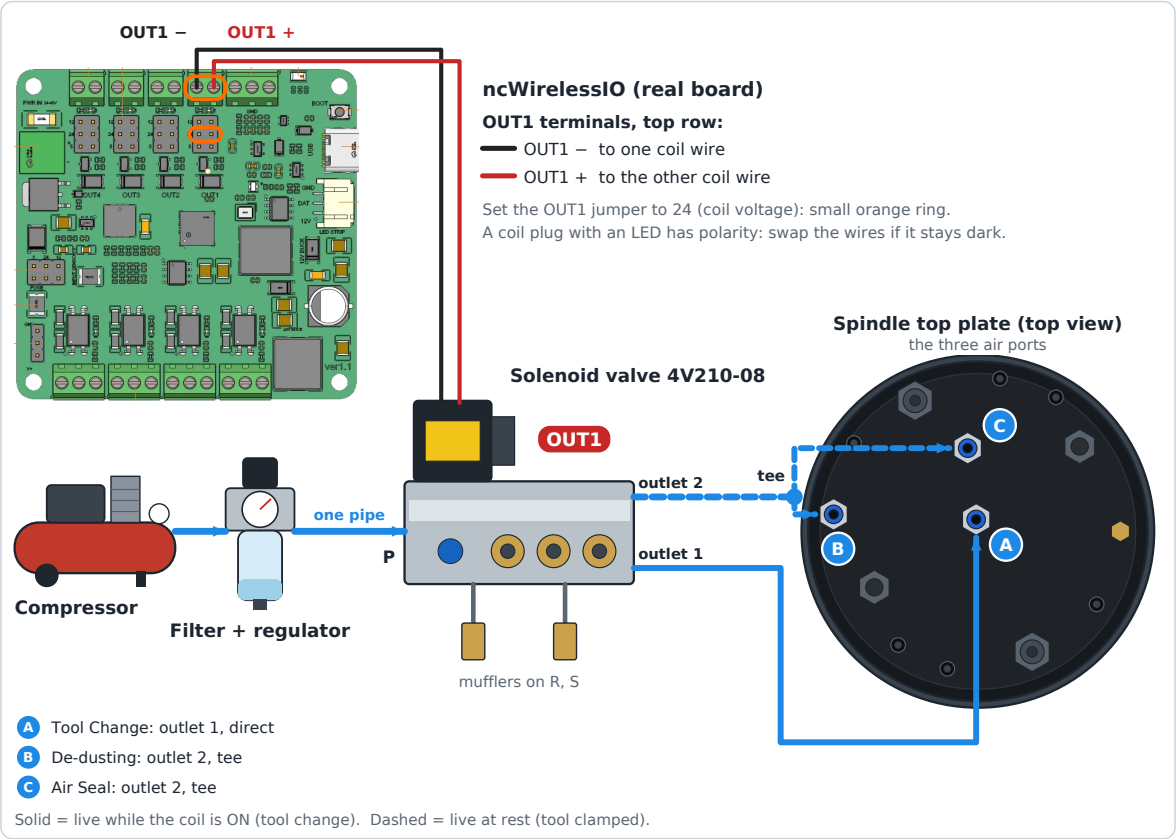

Figure 3. Air circuit (ports A, B, C) and the valve coil wired to OUT1 of the real ncWirelessIO board.

1. Compressor to the filter + regulator, then one air pipe to valve port **P**. Fit mufflers in **R** and **S**.
2. Find the two outlets by test. With the coil unpowered, turn the air on: the outlet that blows is **outlet 2**. The outlet that only blows when the coil is powered (or the manual button on the valve is pressed) is **outlet 1**.
3. **Outlet 1** to port **A** (Tool Change).
4. **Outlet 2** to a tee. One branch to port **B** (De-dusting), the other to port **C** (Air Seal).

How this behaves. A 5/2 valve feeds only one outlet at a time. Coil ON: outlet 1 is live and the tool releases (A); B and C have no air. Coil OFF: outlet 2 is live, so De-dusting (B) and Air Seal (C) have air the whole time the tool is clamped. Loss of power or of the radio link leaves the tool clamped.
Pressure: all three ports get the pressure set on the regulator. Set it for the Tool Change port. Air Seal ports on comparable spindles are specified for about 0.1 to 0.25 MPa; if your spindle sheet says the same, add a small pressure reducer in the outlet 2 line.

Port	Fed from	Typical pressure (ISO20 ATC spindles)	Your value
A Tool Change	Outlet 1, direct	about 0.6 to 0.7 MPa (87 to 100 psi), set on the regulator	_____
B De-dusting	Outlet 2, tee	same regulator pressure as A	_____
C Air Seal	Outlet 2, tee	same as A (sheet value is usually 0.1 to 0.25 MPa)	_____

4. Spindle top plate and plugs

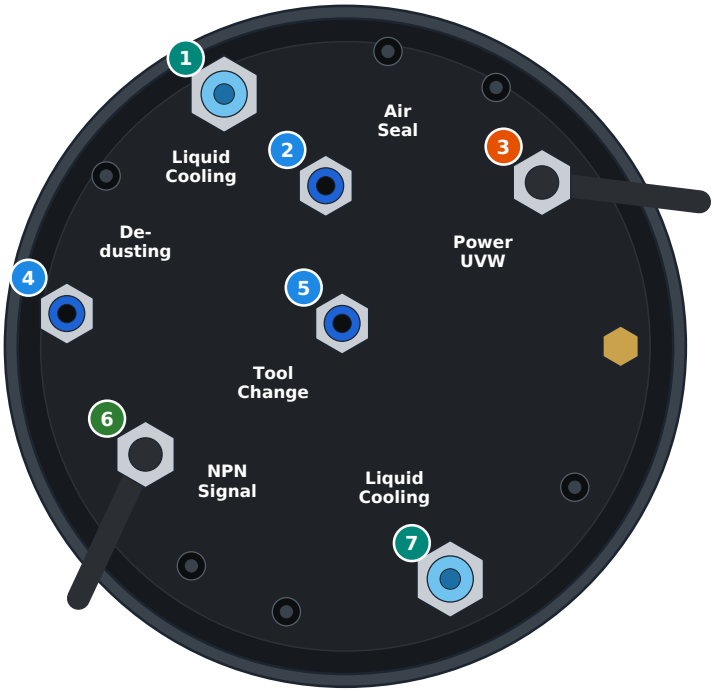

TOP VIEW (looking down on the top plate)

1. **Liquid Cooling**
   hose to or from the cooling module
2. **Air Seal (air port C)**
   air from solenoid outlet 2 (tee)
3. **Power UVW**
   4-pin plug to the H100 VFD
4. **De-dusting (air port B)**
   air from solenoid outlet 2 (tee)
5. **Tool Change (air port A)**
   air from solenoid outlet 1
6. **NPN Signal**
   4-pin plug to the ncWirelessIO
7. **Liquid Cooling**
   the second water hose

Brass plug: leave as fitted

Port positions follow the G-Penny manual photo. Go by the engraving next to each fitting.

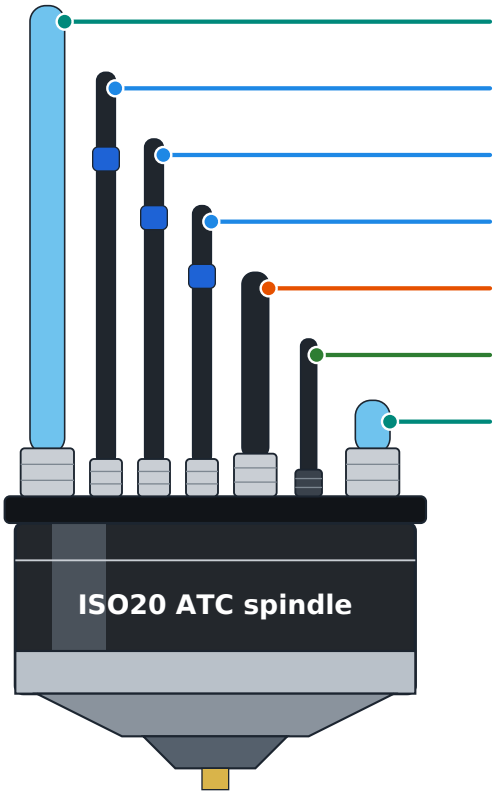

Liquid Cooling: feed
Blue hose from the cooling module.

Tool Change
Air from solenoid outlet 1.

De-dusting
Air from solenoid outlet 2 (tee).

Air Seal
Air from solenoid outlet 2 (tee).

Power UVW (4-pin plug)
To the H100 VFD: U, V, W and ground.

NPN Signal (4-pin plug)
To ncWirelessIO INPUT 1 and INPUT 2.

Liquid Cooling: return
Blue hose back to the cooling module.

Power plug (4 pins)		Signal plug (4 pins)	
1	yellow U	1	Tool LOCK (clamped)
2	red V	2	Tool RELEASED
3	brown W	3	brown (+V)
4	ground	4	blue (0 V)

Names are the engravings on the top plate. Positions here are schematic: follow the engraving beside each fitting.

Figure 4. Top view (laid out as in the G-Penny manual photo) and side view of the spindle connections, with the two plug pin-outs.

5. Wiring the ncWirelessIO

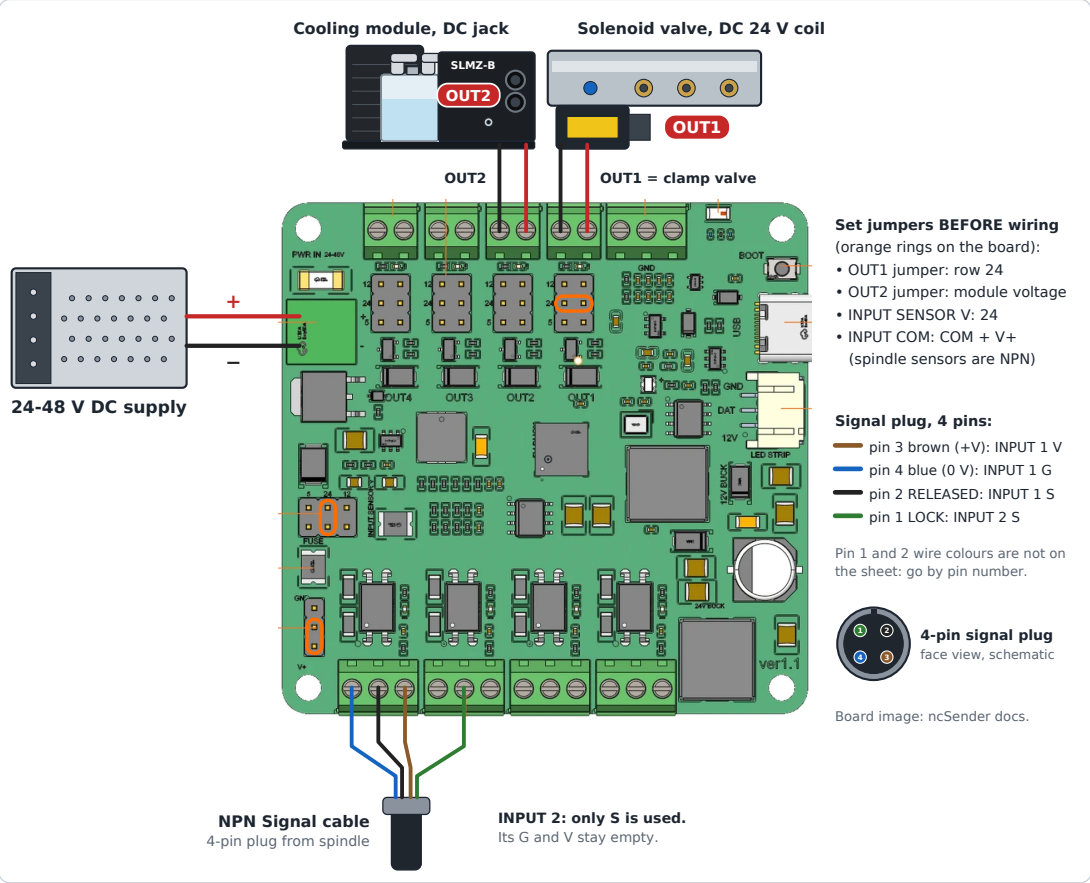

Figure 5. Wiring drawn on the real ncWirelessIO v1.1 board (image from the ncSender documentation). Outputs run OUT4 to OUT1 left to right along the top, inputs INPUT 1 to 4 along the bottom.

Set jumpers first, with power off

Jumper	Setting	Why
OUT1 voltage	24 (or 12 for a 12 V coil)	Must equal the solenoid coil voltage. A 12 V coil on 24 V overheats and burns out.
OUT2 voltage	Same as the cooling module (12 or 24)	Must equal the module's rated DC voltage.
INPUT SENSOR V	24	Supply for the spindle proximity sensors (most are 24 V).
INPUT COM	Shunt on COM and V+	Your spindle sensors are NPN. If the input lights read reversed, this jumper is wrong.

Then wire

1. **PWR IN:** a 24 to 48 V DC supply, + to +, − to −. Reverse polarity is harmless but the board stays off.
2. **OUT1:** the two solenoid coil wires to OUT1 + and −. The board has the coil protection diode built in. If the coil plug has an LED, polarity matters: swap the wires if the LED stays dark.
3. **OUT2:** cooling module wired direct through its DC jack: + to OUT2 +, − to OUT2 −. No relay.
4. **NPN Signal plug (4 pins):** pin 3 (brown, +V) to INPUT 1 **V**; pin 4 (blue, 0 V) to INPUT 1 **G**; pin 2 (Tool RELEASED) to INPUT 1 **S**; pin 1 (Tool LOCK) to INPUT 2 **S**. Leave INPUT 2 G and V empty.

6. Wiring the H100 VFD to the SLB-EXT

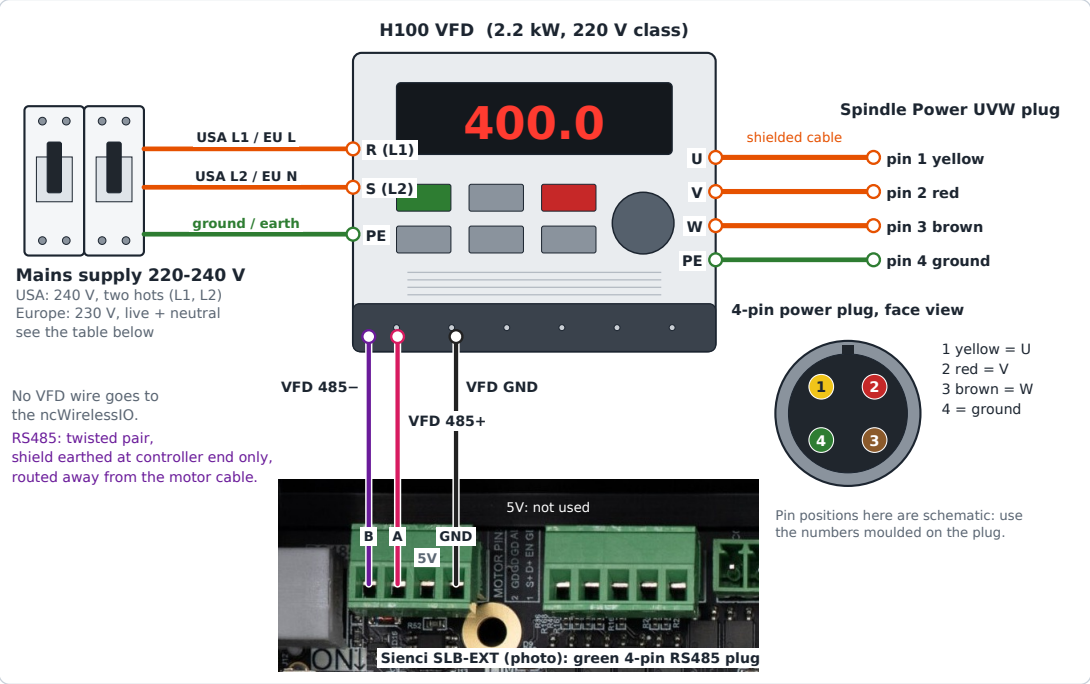

Figure 6. Mains supply (USA or Europe), spindle plug, and RS485 to the SLB-EXT (photo: Sienci Labs resources).

VFD terminal	USA: 240 V split-phase	Europe: 230 V single-phase
R (L1)	■■ L1 hot: **black**	■■ L live: **brown**
S (L2)	■■ L2 hot: **red**	■■ N neutral: **blue**
PE	■■ ground: **green** (or bare copper)	■■ earth: **green-yellow**
Not connected	□□ neutral: **white**	nothing left over
Where the 220 V comes from	240 V between the two hots (each hot is 120 V to neutral)	230 V between live and neutral
Protection	2-pole breaker	breaker and RCD to local rules

- **Supply:** a US 120 V wall outlet cannot run this VFD. H100 input terminal names vary (R, S, T or L1, L2): use the two the drive's label gives for single-phase input. Size breaker and wire from the VFD nameplate; have an electrician install the circuit. US cable with only black, white and bare wires: the white is used as the second hot and must be re-marked red or black.
- **RS485 to the SLB-EXT green 4-pin plug:** VFD 485+ to **A**, VFD 485− to **B**, VFD GND to **GND**. Leave **5V** empty. It is the 4-pin plug beside the grey jack at the top-left of the board; the 5-pin plug next to it is the PWM spindle output and is not used.
- Switch the VFD on before the SLB-EXT so the two can connect. If you get Alarm 14, swap the A and B wires.
- Earth the spindle body and the VFD PE terminal. Use the RS485 GND terminal for the signal ground, not the motor earth.
- The power plug has 4 pins: U, V, W and ground. Before powering up, confirm the ground pin with a meter: it is the pin with continuity to the spindle body.
- First run from the VFD keypad (F001 = 0) at low speed and check rotation: clockwise seen from above. If it is reversed, swap any two of U, V, W.

7. H100 VFD settings: two spindle options

Pick your spindle. Both versions are 220 V, 24,000 rpm and are wired and plumbed exactly the same. Only the VFD and speed settings differ. Read the nameplate on the spindle: **Option A** = 2-pole (2P), 400 Hz. **Option B** = 4-pole (4P), 800 Hz. Using the wrong column runs the spindle at half or double the speed you asked for.

Code	Option A 2P / 400 Hz	Option B 4P / 800 Hz	Meaning
F013	08	08	Factory reset (optional, do first if the drive history is unknown)
F004	**400**	**800**	Reference (base) frequency, Hz
F005	**400**	**800**	Maximum operating frequency, Hz = 24,000 rpm
F011	**100**	**200**	Lower frequency limit = 6,000 rpm. Use the spindle's minimum speed.
F143	**2**	**4**	Motor poles. The controller reads this to convert rpm to Hz.
F144	24000	24000	Motor rated speed, rpm
F008 / F141	220 / 220	220 / 220	Maximum output voltage / motor rated voltage
F142	nameplate	nameplate	Motor rated current in amps (do not exceed the nameplate)
F014 / F015	6 to 10 s	6 to 10 s	Acceleration / deceleration time. Too short a deceleration trips over-voltage.
F023	0	0	Reverse prohibited
F163	1	1	Modbus address
F164	1*	1*	Communication speed: 9600 baud
F165	3*	3*	Data format: 8N1, RTU
F169	0	0	Frequency sent with 1 decimal place
F001 / F002	2 / 2	2 / 2	Run command and frequency from the communication port (set last)

* The widely circulated H100 manual lists F164 as 0 = 4800, 1 = 9600, 2 = 19200, 3 = 38400 and F165 = 3 as 8N1 RTU; factory values are F164 = 2 and F165 = 3. H100 clones vary, so confirm in the manual that came with your drive. The H100 manual gives F004 and F005 a range up to 1000 Hz, so 800 Hz is within the drive's range. Leave parameters not listed here at factory values.

8. SLB-EXT controller settings and speed check

In ncSender open Settings, Firmware and search for each number.

Setting	Option A 2P / 400 Hz	Option B 4P / 800 Hz	Notes
$395 Default spindle	H-100	H-100	Hard-reset (power-cycle) the controller after changing
$476 Spindle 0 ModBus address	1	1	Same as F163. Other grblHAL boards call this $360
Modbus baud rate (often $374)	9600	9600	Same as F164. Search “modbus” to find it
$461 RPM per Hz	**60**	**30**	60 for a 2-pole motor, 30 for a 4-pole motor
$30 / $31 Max / min rpm	24000 / 6000	24000 / 6000	Same for both: the spindle speed range
$340 At-speed tolerance	0, later 10	0, later 10	Raise to 10 % once the spindle runs reliably

Check that ncSender and the VFD show the correct speed

Send each command from the ncSender console and read the frequency on the VFD display. The spindle speed shown in ncSender should match the S value.

Command	Speed asked	VFD display, Option A (2P)	VFD display, Option B (4P)
M3 S6000	6,000 rpm	100.0 Hz	200.0 Hz
M3 S12000	12,000 rpm	200.0 Hz	400.0 Hz
M3 S18000	18,000 rpm	300.0 Hz	600.0 Hz
M3 S24000	24,000 rpm	400.0 Hz	800.0 Hz
M5	stop	0.0 Hz	0.0 Hz

- **How the speed is worked out:** the grblHAL H-100 driver reads F143 (poles), F005 (maximum) and F011 (minimum) from the VFD at start-up and converts rpm to Hz itself. So the VFD must be set first and switched on before the SLB-EXT.
- **Option B shows half the expected Hz** (for example 200.0 Hz at S12000): the controller is treating the motor as 2-pole. Check F143 = 4, power-cycle VFD then SLB-EXT, and update the SLB-EXT firmware if it still happens.
- **Speed in ncSender is off by a constant factor** (most often 10 times): the ncSender VFD guide points to setting $471.
- **ALARM 14 or ALARM 19:** the Modbus link is failing. Check address, baud rate, A/B polarity and the ground wire.

9. ncSender settings

Pair the ncWirelessIO

1. Plug the Wireless USB stick into the ncSender computer and activate it under Accessories.
2. Power the ncWirelessIO from PWR IN. The status light breathes yellow while unpaired.
3. In Accessories click **Pair Device** (60-second window), then hold the **BOOT** button on the board for 3 seconds.
4. Select ncWirelessIO. It should show **Connected**. If it shows “!”, click **Activate**.
5. Apply any firmware update offered on the Firmware card and keep the board powered while it runs.

Configure the Pneumatic ATC plugin

1. Settings, Plugins: disable any other tool-changer plugin, enable **Pneumatic ATC**, then open **PneumaticATC** from the Plugins tab.
2. ATC Profile: choose **ncSender Wireless ATC**. It pre-assigns OUT1 (clamp valve), INPUT 1 (drawbar sensor) and INPUT 2 (tool sensor).
3. Rack Settings: number of slots, Fork or Cup holding, slide direction, distance and speed, safety margin.
4. Layout: jog over slot 1 and press **Grab current**; set orientation, direction and slot distance; set Engagement Z.
5. TLS tab: jog a tool over the tool setter and grab its location. Keep Seek Start Z above your longest tool.
6. Advanced, **Spindle Water Pump**: Pump Output = Wireless I/O OUT2, Off After Idle = 10 minutes (use 30 seconds while checking wiring).
7. Advanced, **Taper blow / cone clean**: leave off. That option is for a blow port teed from the release line; here De-dusting is fed from outlet 2.
8. Press **Save** on every tab you changed.

> The Drawbar role on OUT1 blocks release whenever the spindle could be turning, switches off if the spindle starts, and also blocks if the board hears nothing from ncSender for 3 seconds. ncSender then shows **Drawbar Release Blocked**.